# TYPICAL RULES FOR DETERMINING MOUNTING HEIGHTS, LOCATIONS AND CONFIGURATIONS

LOCATE ITEMS AS INDICATED WHEN SHOWN DIMENSIONED (BOTH HORIZ AND VERT) BY A PLAN OR DETAIL PLAN.

SPECIFIC VERT DIMENSIONS SHOWN BY ELEVATIONS, SECTIONAL ELEVATIONS, OR DETAIL ELEVATIONS AND SPECIFIC HORIZ DIM SHOWN BY PLANS AND DETAIL PLANS TAKE PRECEDENCE OVER TYPICAL MOUNTING HEIGHTS AND LOCATION RULES.

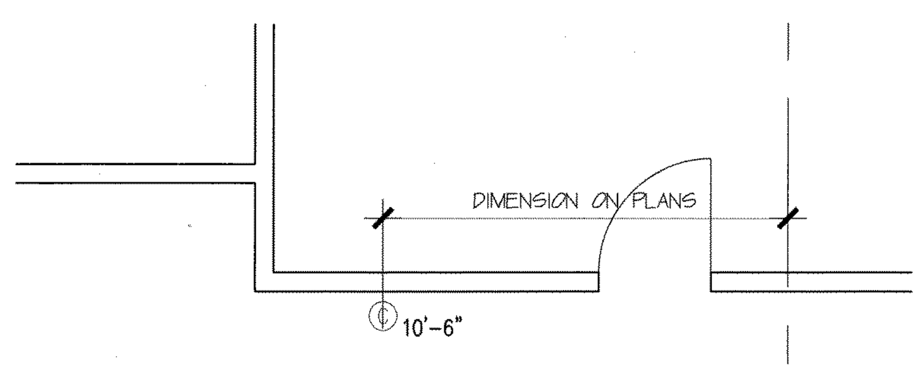


NON-TYPICAL MOUNTING HEIGHTS MAY BE INDICATED BY SYMBOL (AS SHOWN), BY KEYED NOTE, OR BY NOTATION ON PLANS.

## RULE 1

WHEN COMPLETELY DIMENSIONED ON PLANS

WHEN NOT DIMENSIONED AND SHOWN LOCATED ON A COLUMN OR PILASTER, AND WHEN NO OTHER TYPICAL CONFIGURATION DIAGRAM APPLIES: HORIZONTALLY CENTER ITEM ON FACE OF COLUMN OR PLASTER. ALIGN VERTICALLY CENTERS OF MULTIPLE ITEMS HAVING DIFFERING TYPICAL MOUNTING HEIGHTS.

WHEN MULTIPLE ITEMS HAVING THE SAME TYP MOUNTING HEIGHT ARE INDICATED, HORIZONTALLY CENTER GROUP OF ITEMS ON FACE OF COLUMN OR PLASTER (SEE RULE 7).

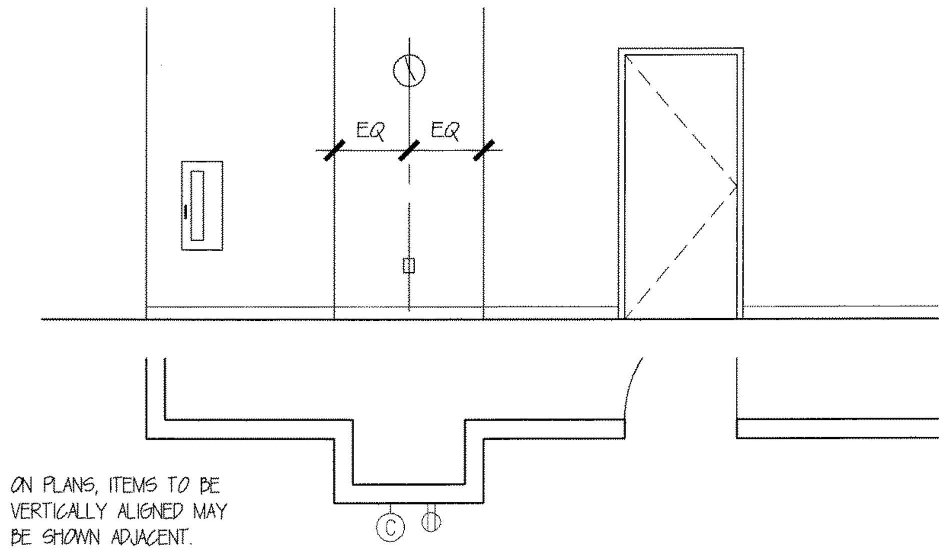


ON PLANS, ITEMS TO BE VERTICALLY ALIGNED MAY BE SHOWN ADJACENT.

## RULE 2

NOT DIMENSIONED AND LOCATED ON COLUMN OR PILASTER

WHEN NOT DIMENSIONED AND SHOWN LOCATED ADJ TO STRIKE SIDE OF DOOR, AND WHEN STRIKE-SIDE CLEARANCE IS BETWEEN 12 INCHES AND 18 INCHES, AND WHEN NO OTHER TYPICAL CONFIGURATION DIAGRAM APPLIES: MOUNT ITEMS IN RELATION TO FRAME USING TYP OFFSET DIMENSION. VERTICALLY ALIGN CENTERS OF ITEMS MOUNTED AT DIFFERENT HEIGHTS.

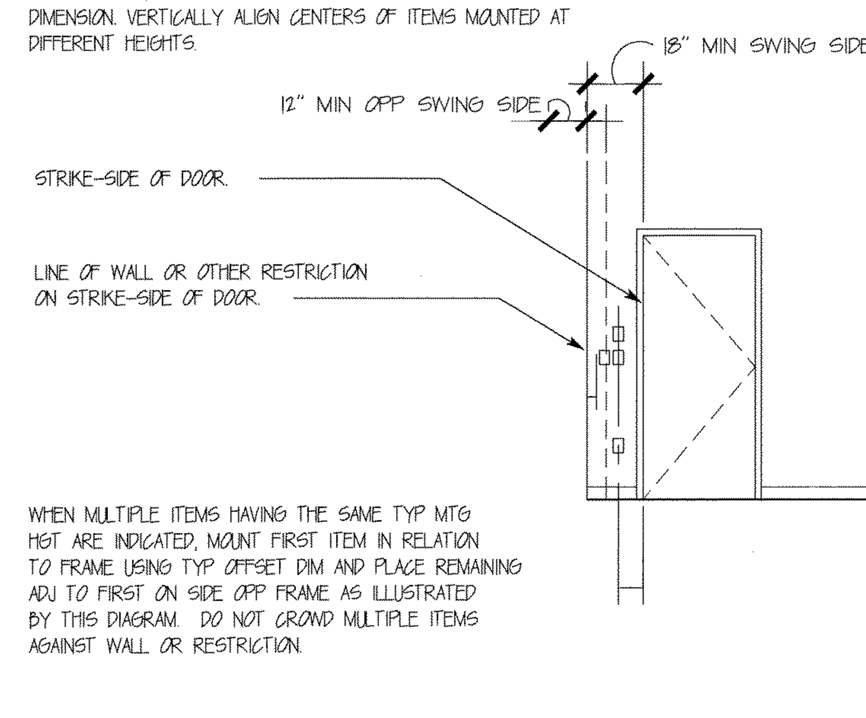


WHEN MULTIPLE ITEMS HAVING THE SAME TYP MTG HGT ARE INDICATED, MOUNT FIRST ITEM IN RELATION TO FRAME USING TYP OFFSET DIM AND PLACE REMAINING ADJ TO FIRST ON SIDE OPP FRAME AS ILLUSTRATED BY THIS DIAGRAM. DO NOT CROWD MULTIPLE ITEMS AGAINST WALL OR RESTRICTION.

## RULE 5

NOT DIMENSIONED AND LOCATED ADJ TO MIN STRIKE-SIDE OF DOOR

WHEN NOT DIMENSIONED AND SHOWN LOCATED ADJACENT TO DOOR, AND WHEN NO OTHER TYPICAL CONFIGURATION DIAGRAM APPLIES: MOUNT ITEMS IN RELATION TO FRAME USING TYP OFFSET DIMENSION. VERTICALLY ALIGN CENTERS OF ITEMS MOUNTED AT DIFFERENT HEIGHTS.

WHEN MULTIPLE ITEMS HAVING THE SAME TYP MOUNTING HEIGHT ARE INDICATED, MOUNT FIRST ITEM IN RELATION TO FRAME USING TYP OFFSET DIMENSION AND PLACE REMAINING ITEMS ADJACENT TO FIRST ON SIDE OPPOSITE FRAME AS ILLUSTRATED BY THIS DIAGRAM.

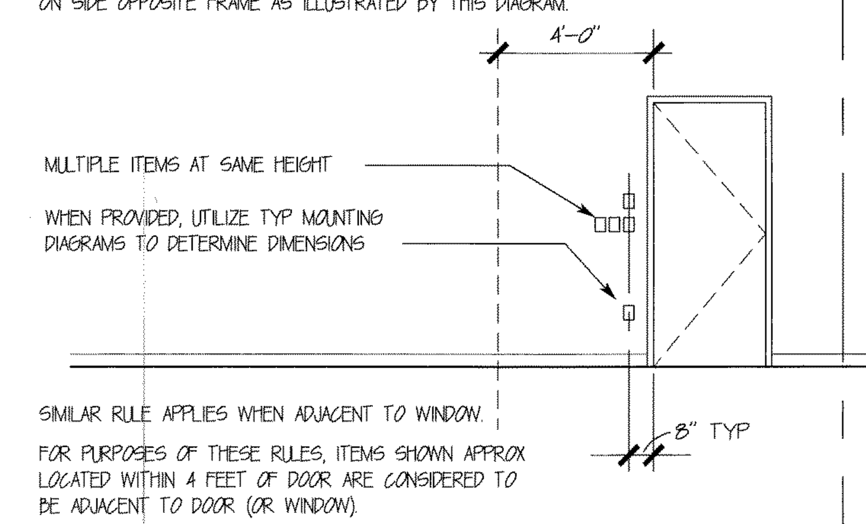


SIMILAR RULE APPLIES WHEN ADJACENT TO WINDOW.

FOR PURPOSES OF THESE RULES, ITEMS SHOWN APPROX LOCATED WITHIN 4 FEET OF DOOR ARE CONSIDERED TO BE ADJACENT TO DOOR (OR WINDOW).

## RULE 6

NOT DIMENSIONED AND LOCATED ADJACENT TO DOOR (OR WINDOW)

WHEN NOT DIMENSIONED AND SHOWN LOCATED ON A COLUMN OR PILASTER, AND WHEN NO OTHER TYPICAL CONFIGURATION DIAGRAM APPLIES: HORIZ CENTER GROUP OF SIMILAR ITEMS HAVING THE SAME MOUNTING HEIGHT(S) ABOUT THE CENTERLINE OF THE COLUMN OR PLASTER.

WHEN APPLICABLE, COMBINE THIS RULE WITH RULE 6 (PREVIOUS) TO SYMMETRICALLY ARRANGE GROUPS OF ITEMS HAVING BOTH DIFFERING AND SIMILAR MOUNTING HEIGHTS.

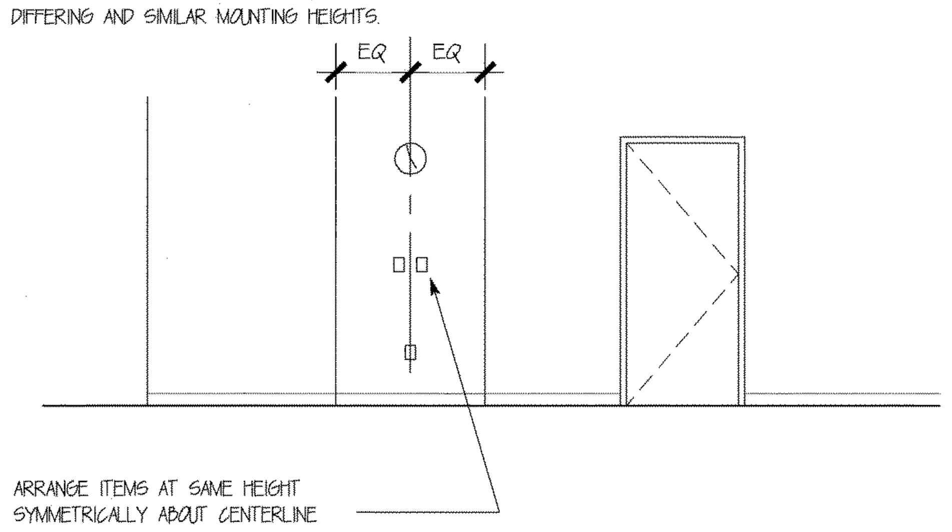


## RULE 3

NOT DIMENSIONED AND LOCATED ON COLUMN OR PILASTER

WHEN NOT DIMENSIONED AND SHOWN LOCATED ON A COLUMN OR PLASTER, AND WHEN NO OTHER TYPICAL CONFIGURATION DIAGRAM APPLIES: HORIZONTALLY CENTER GROUP OF DISSIMILAR ITEMS HAVING CONFLICTING MOUNTING HEIGHT(S) ABOUT THE CENTERLINE OF THE COLUMN OR PLASTER.

WHEN APPLICABLE, COMBINE THIS RULE WITH RULE 2 AND/OR RULE 3 (PREVIOUS) TO SYMMETRICALLY ARRANGE GROUPS OF ITEMS HAVING DIFFERING, SIMILAR, AND CONFLICTING MOUNTING HEIGHTS.

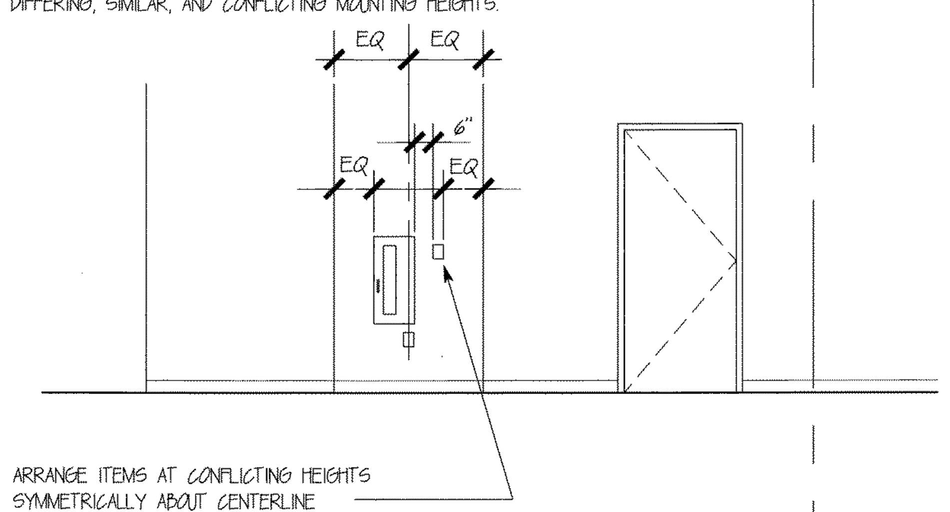


## RULE 4

NOT DIMENSIONED AND LOCATED ON COLUMN OR PILASTER

WHEN NOT DIMENSIONED AND SHOWN LOCATED ADJACENT TO DOOR, AND WHEN NO OTHER TYPICAL CONFIGURATION DIAGRAM APPLIES: MOUNT ITEMS IN RELATION TO SWING USING TYP OFFSET DIMENSION. VERTICALLY ALIGN CENTERS OF ITEMS MOUNTED AT DIFFERENT HEIGHTS.

WHEN MULTIPLE ITEMS HAVING THE SAME TYP MOUNTING HEIGHT ARE INDICATED, MOUNT FIRST ITEM IN RELATION TO SWING USING TYP OFFSET DIMENSION AND PLACE REMAINING ITEMS ADJACENT TO FIRST ON SIDE OPPOSITE FRAME AS ILLUSTRATED BY THIS DIAGRAM.

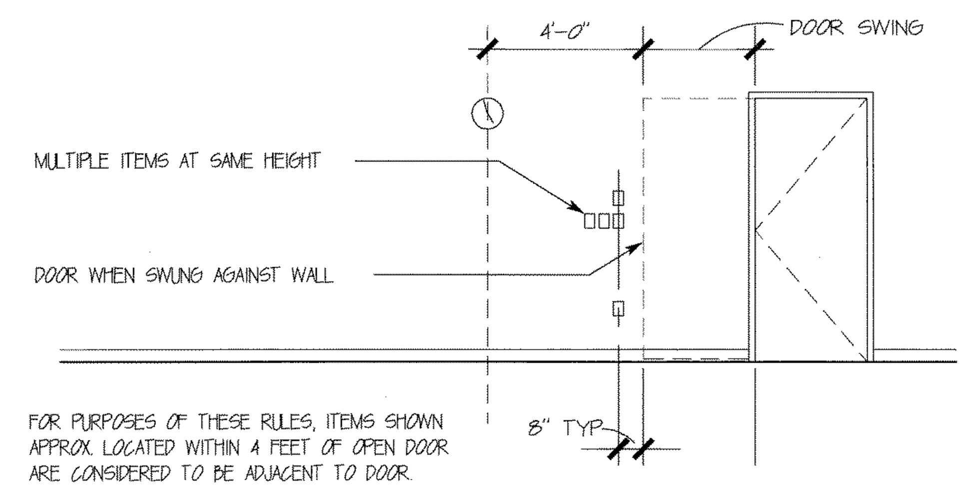


FOR PURPOSES OF THESE RULES, ITEMS SHOWN APPROX LOCATED WITHIN 4 FEET OF OPEN DOOR ARE CONSIDERED TO BE ADJACENT TO DOOR.

## RULE 7

NOT DIMENSIONED AND LOCATED ADJ TO DOOR AND ON WALL AGAINST WHICH DOOR SWINGS

WHEN NOT DIMENSIONED AND SHOWN LOCATED ADJ TO CHANGE IN PLANE OF WALL, AND WHEN NO OTHER TYP CONFIGURATION DIAGRAM APPLIES: MOUNT ITEMS IN RELATION TO PLANE CHANGE USING TYP OFFSET DIM. VERTICALLY ALIGN CENTERS OF ITEMS MOUNTED AT DIFFERENT HEIGHTS.

WHEN MULTIPLE SIMILAR ITEMS HAVING THE SAME TYP MTG HEIGHT ARE INDICATED, MOUNT FIRST ITEM IN RELATION TO PLANE CHANGE USING TYP OFFSET DIMENSION AND PLACE REMAINING ITEMS ADJACENT TO FIRST ON SIDE OPPOSITE PLANE CHANGE AS ILLUSTRATED BY THIS DIAGRAM.

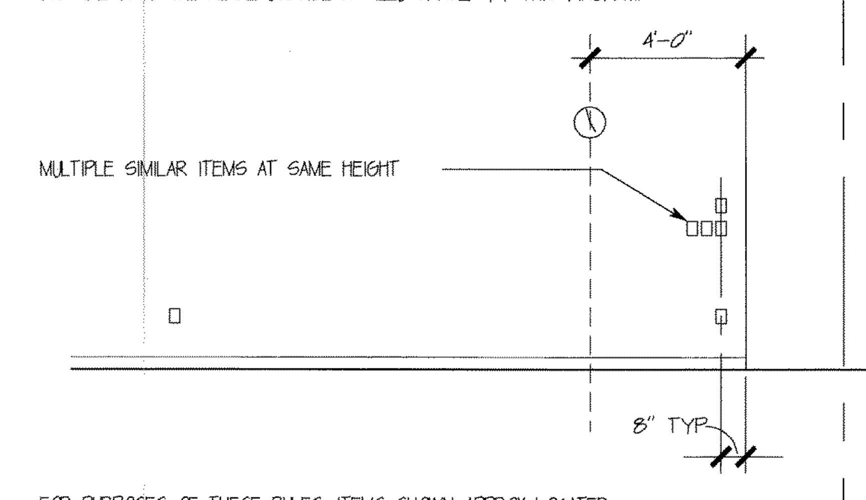


FOR PURPOSES OF THESE RULES, ITEMS SHOWN APPROX LOCATED WITHIN 4 FEET OF PLANE CHANGE ARE CONSIDERED TO BE ADJACENT TO CHANGE IN PLANE.

## RULE 8

WHEN NOT DIMENSIONED AND LOCATED ADJACENT TO CHANGE IN WALL DIRECTION

# ARCHITECTURAL DIMENSIONING CONVENTIONS

1. EXCEPT WHERE DIRECTED TO PLACE ITEMS OF THE WORK AT THE "APPROXIMATE LOCATION SHOWN," DO NOT SCALE DRAWINGS FOR DIMENSIONAL INFORMATION.

2. ALL ELEMENTS OF THE DRAWINGS MAY NOT BE DRAWN TO EXACT SCALE. ALL DIMENSIONS REQUIRED ARE SHOWN (OR MAY BE DERIVED FROM THOSE SHOWN OR NOTED) ON THE FLOOR PLANS, DETAIL PLANS, ELEVATIONS, SECTIONS, SCHEDULES, CONFIGURATION DETAILS, AND SPECIFICATIONS. SEE THE NOTES BELOW AND SYMBOLS ON SHEET G101 FOR DIMENSIONING CONVENTIONS USED ON THIS PROJECT.

3. EXCEPT WHERE SPECIFICALLY NOTED TO THE CONTRARY, ALL DIMENSIONS SHOWN ON THE ARCHITECTURAL DRAWINGS CONFORM TO THE FOLLOWING CONVENTIONS:

   A. DIMENSIONS UTILIZING THE "CENTERLINE" SYMBOL ARE MEASURED TO:
   - STRUCTURAL OR DIMENSIONAL GRID LINES.
   - CENTERLINE OF CONCRETE OR CONC MASONRY UNIT WALLS (EXCLUSIVE OF FURRING OR APPLIED FINISHES HAVING THICKNESS). REFER TO THE ARCH PLANS AND SECTIONS, THE STRUCT DRAWINGS, OR PARTITION SCHEDULE TO DETERMINE THE THICKNESS OF CONCRETE OR CONC MASONRY UNIT WALLS.
   - CENTERLINE OF PARTITION ASSEMBLY (EXCLUSIVE OF ANY APPLIED FINISHES HAVING THICKNESS WHICH MAY BE ADDED TO SUCH WALLS) AT PARTITIONS FRAMED WITH METAL STUDS. REFER TO "PARTITION SCHEDULE" TO DETERMINE THICKNESS OF EACH PARTITION TYPE.
   - CENTERLINE OF DOOR, WINDOW, OR LOUVER OPENING.
   - CENTERLINE OF EQUIPMENT OR FURNISHING.
   - CENTERLINE OF OTHER FEATURES AS INDICATED.

   B. REFER TO SHEET G101 FOR SYMBOL USED TO INDICATE CENTERLINE DIMENSION.

   C. DIMENSIONS UTILIZING THE "FACE OF" SYMBOL ARE MEASURED TO:
   - FACE OF CONCRETE OR CONC MASONRY UNIT WALL (EXCLUSIVE OF APPLIED FINISHES HAVING THICKNESS OR FURRING WHICH MAY BE ADDED TO THE FACE OF SUCH WALLS).
   - FACE OF PARTITION ASSEMBLY (EXCLUSIVE OF ANY APPLIED FINISHES HAVING THICKNESS WHICH MAY BE ADDED TO SUCH WALL) AS DEFINED BY THE PARTITION SCHEDULE. UNLESS NOTED AS A "FACE OF FINISH" OR "CLEAR" DIMENSION (SEE NOTE 'E' BELOW), DIMENSIONS ARE NOT MEASURED TO THE FACE OF APPLIED FINISH. REFER TO THE "PARTITION SCHEDULE" TO DETERMINE THE THICKNESS OF EACH PARTITION TYPE.
   - INSIDE EDGE OF FINISHED DOOR OPENING. REFER TO THE "DOOR SCHEDULE" FOR ADDITIONAL DIMENSIONAL INFORMATION.
   - DIMENSION OR WORK POINT AS INDICATED ON RELATED ARCH DETAIL PLAN, SECTION, ELEVATION, LAYOUT OR CONFIGURATION DETAIL, OR CONSTRUCTION DETAIL.

   D. REFER TO SHEET G101 FOR SYMBOL USED TO INDICATE "FACE OF" DIMENSION.

   – CONTINUED AT TOP OF NEXT COLUMN

3. NOTE NO 3 CONTINUED:

   E. WHERE "FACE OF FINISH" OR "CLEAR" DIMENSIONS ARE SPECIFICALLY NOTED, THE DIM IS MEASURED TO:
   - FINISH FACES AT THE MOST NARROW OR CONSTRICTED POINTS OF SECTION WHERE DIMENSION IS SHOWN, WHEN THE DIMENSION OCCURS ACROSS AN OPEN SPACE. THIS CASE, A "FACE OF FINISH" DIMENSION IS EQUIVALENT TO A "CLEAR" DIMENSION.
   - FINISH FACES AT THE WIDEST OR MOST EXPANSIVE POINTS OF THE SECTION THE DIMENSION IS SHOWN WHEN THE DIMENSION OCCURS ACROSS AN OBJECT OR GROUP OF OBJECTS.

   F. WHERE "EQUAL" DIMENSIONS ARE USED ON REFLECTED CEILING PLANS TO LOCATE CEILING GRID WORK POINTS, MEASURE DIMENSIONS TO:
   - EDGE OF THE INDICATED CEILING AT THE FACE OF THE ADJACENT APPLIED FINISH MEASURED AT THE PLANE OF THE CEILING.
   - CAUTION: DUE TO THE POSSIBLE APPLICATION OF APPLIED FINISHES – THICKNESS OF WHICH MAY VARY BETWEEN FLOOR AND CEILING AND IS NOT ACCOUNTED FOR (EXCEPT AS INDICATED BY "FOF" OR "CLEAR") BY THE DIMENSION SHOWN ON THE FLOOR PLANS – THE CONTRACTOR MUST ADJUST, AS NECESSARY, THE FLOOR PLAN DIMENSIONS TO REFLECT THE ACTUAL DIMENSIONS FOUND AT PLANE OF THE CEILING.

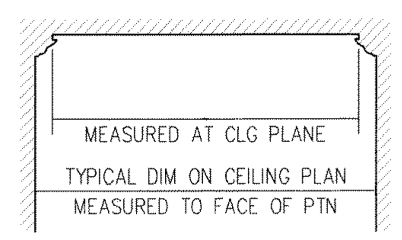


4. WHERE DIMENSIONS ARE NOT PROVIDED ON FLOOR PLANS TO LOCATE DOOR OPENINGS, APPLY THE FOLLOWING RULES, IN ORDER, TO DETERMINE THE LOCATION OF DOOR OPENINGS:

   A. DOOR OPENINGS MAY BE DIMENSIONED ON DRAWINGS OTHER THAN THE FLOOR PLANS. REFER TO THE SECTIONS, ELEVATIONS, DETAILS, AND DOOR SCHEDULE NOTES FOR ADDITIONAL DIMENSIONAL INFORMATION.

   B. WHERE THE HINGE-SIDE OF A DOOR IS SHOWN ADJACENT TO A WALL – OR WALLS – PERPENDICULAR TO THE WALL IN WHICH THE DOOR OPENING OCCURS:

   AT DOORS OCCURRING IN METAL FRAMED GYPSUM BOARD PARTITIONS, LOCATE THE HINGE-SIDE OF THE DOOR FINISHED OPENING 4 INCHES FROM THE FACE (EXCLUSIVE OF APPLIED FINISHES) OF THE THE CLOSEST PERPENDICULAR WALL OR PARTITION ASSEMBLY.

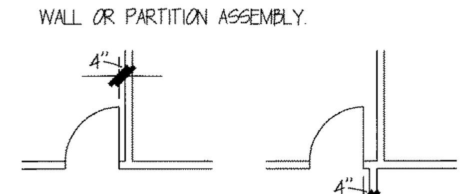


4. NOTE NO 4 CONTINUED:

   AT DOORS OCCURRING IN WALLS OF CONC MASONRY UNIT CONSTRUCTION, LOCATE THE HINGE-SIDE OF THE DOOR FINISHED OPENING 10 INCHES FROM THE FACE (EXCLUSIVE OF APPLIED FINISHES) OF THE THE CLOSEST PERPENDICULAR WALL OR PARTITION ASSEMBLY.

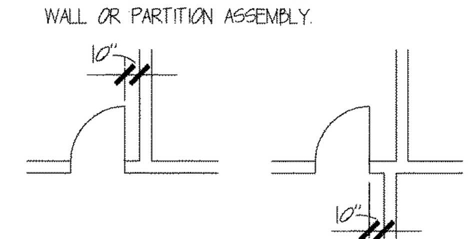


   C. WHERE DOOR OCCURS NOT ADJACENT TO A PERPENDICULAR WALL AND EITHER "DIM E" OR "DIM F" IS 16'-0" OR LESS, LOCATE DOOR UTILIZING THE FOLLOWING MINIMUM DIMENSIONS:
   - DIMENSION A = 18 INCHES MIN
   - DIMENSION B = 12 INCHES MIN
   - DIMENSION C = DOOR WIDTH + 2 INCHES MINIMUM
   - DIMENSION D = 4 INCHES MIN AT METAL FRAMED GYP BD PARTITIONS OR – EVEN MULTIPLE OF 1/2 CMU MODULE PLUS 2 INCHES AT CONC MASONRY UNIT WALLS
   - DIMENSIONS E AND F = AS SHOWN ON PLANS
   - DIMENSION G = 36 INCHES MIN
   - DIMENSION H = 60 INCHES MIN

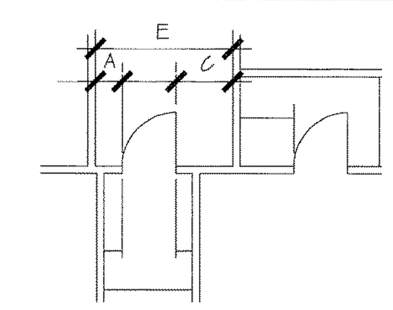


   - IF SPACE ALLOWS, CENTER DOOR IN WALL SHOWN ON THE DRAWINGS SO THAT EITHER "DIM A" EQUALS "DIM C" OR "DIM B" EQUALS "DIM D".

   D. IF "DIM E" IN DIAGRAMS BELOW IS LESS THAN THE SUM OF 2 TIMES THE DOOR WIDTH PLUS 20 INCHES, LOCATE DOOR SO THAT MINIMUMS STATED BY NOTE NO 4C ABOVE FOR "DIM A", "DIM B," AND "DIM D" ARE MET – MAXIMIZING "DIM A" AND MINIMIZING "DIM D" TO THE EXTENT POSSIBLE.

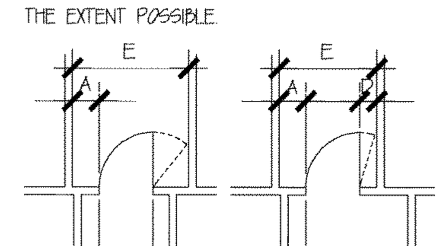


   E. WHERE DOOR IS SHOWN LOCATED IN A LARGE EXPANSE OF OPEN WALL ("DIM E" AND "DIM F" IN DIAGRAM BELOW BOTH EXCEED 16'-0"), PLACE DOOR AT APPROXIMATE LOCATION SHOWN ON THE PLANS. WHERE DOOR OCCURS IN CMU WALL, PLACE DOOR AT APPROXIMATE LOCATION SHOWN WHILE MINIMIZING "CUT" OR PARTIAL CMU MODULES ADJACENT TO THE JAMBS.

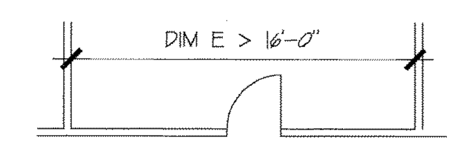


5. WHERE WALLS AND/OR PARTITIONS OF UNEQUAL THICKNESS ABUT, ALIGN EXPOSED FACES, UNLESS OTHERWISE NOTED.

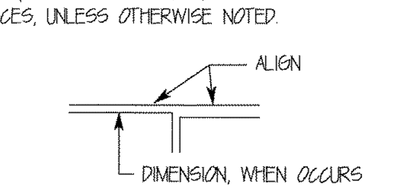


# DEFINITIONS: FINISH FLOOR, CEILING AND ROOF ELEVATION

1. THE TERM "REFERENCE" ELEVATION OR DIMENSIONS REFERS TO A NOMINAL WORK POINT. THE ACTUAL ELEVATION OR MAY VARY FROM THE REFERENCE POINT. REFER TO THE APPLICABLE DETAIL TO DETERMINE THE RELATIONSHIP BETWEEN THE ACTUAL ELEVATION OR DIMENSION AND THE STATED REFERENCE POINT.

2. "FINISH FLOOR" ELEVATIONS ARE MEASURED AT THE TOP OF CONCRETE FLOOR SLAB, UNLESS OTHERWISE NOTED. APPLIED FINISHES SUCH AS RESILIENT FLOORING OR CARPET MAY RAISE THE ACTUAL FINISH SURFACE ABOVE THE REFERENCE ELEVATION PROVIDED FOR THE FINISH FLOOR.

3. WHERE CONC FLOOR SLAB IS DEPRESSED TO ACCOMMODATE MORTAR BEDS, SETTING BEDS, AND OTHER SIMILAR FLOOR ASSEMBLIES, FINISHED FLOOR ELEVATIONS ARE MEASURED AS IF CONC DEPRESSION DID NOT OCCUR.

4. CEILING HEIGHT DIMENSIONS ARE MEASURED TO FINISHED SURFACES, UNLESS OTHERWISE NOTED. WHERE HEIGHT IS NOT NOTED ON THE FLOOR OR CEILING PLANS, VERIFY CEILING HEIGHT WITH ARCHITECT PRIOR TO INSTALLATION.

5. THE "REFERENCE ROOF ELEVATION" REFERS, UNLESS OTHERWISE NOTED, TO THE ELEVATION OF THE TOP OF THE STRUCTURAL ROOF SLAB AT THE PERIMETER OF THE ROOF AREA INDICATED.

6. WHERE THE STRUCTURAL ROOF SLAB IS SLOPED TO DRAIN, THE ACTUAL TOP OF SLAB ELEVATION WILL VARY FROM THE STATED "REFERENCE ROOF ELEVATION." SEE THE ARCH ROOF PLANS AND STRUCTURAL DRAWINGS TO DETERMINE WHERE THE STRUCTURE IS SLOPED TO DRAIN.

7. INSULATION AND ROOFING MATERIALS RAISE THE ACTUAL FINISH SURFACE OF THE ROOF ABOVE THE STATED "REFERENCE ROOF ELEVATION." THICKNESS OF INSUL AND ROOFING MATERIALS VARIES WITH THE TYPE OF ROOF SYSTEM INDICATED. SEE THE ARCH ROOF PLANS.


Architect sealing the document:
Aaron Marshall King

STATE OF FLORIDA
AARON MARSHALL KING
AR95337
12-28-10
REGISTERED ARCHITECT

GRIMALDI'S
COAL BRICK-OVEN PIZZERIA
4000 N Scottsdale Road, Suite 203
Scottsdale, Arizona 85252
Phone: 405.664.3147 Fax: 405.562.1282

Aaron M. King
Architect
1221 N. Main Avenue
Springfield, MO 65802
Phone: (417) 864-0916
aking.integrity-d@earthlink.net


DOCUMENTS FOR:

DOWNTOWN at the GARDENS
**GRIMALDI'S PIZZERIA**
11701 LAKE VICTORIA GARDENS AVE., STE 3101
PALM BEACH GARDENS, FL 33410


This document, and the ideas and designs incorporated herein, as an instrument of professional service, is the property of Aaron M. King, and is not to be used, in whole or in part, for any other project, without the written authorization of Aaron M. King.


Revisions:

| No. | Date | Description |
| --- | --- | --- |

Project: DOWNTOWN at the GARDENS
Drawn: Aaron M. King
Approved:
Issue Date: 12/28/2010

Sheet Title:
TYPICAL RULES, DIMENSIONING CONVENTIONS, DEFINITIONS

Sheet No:
**G003**