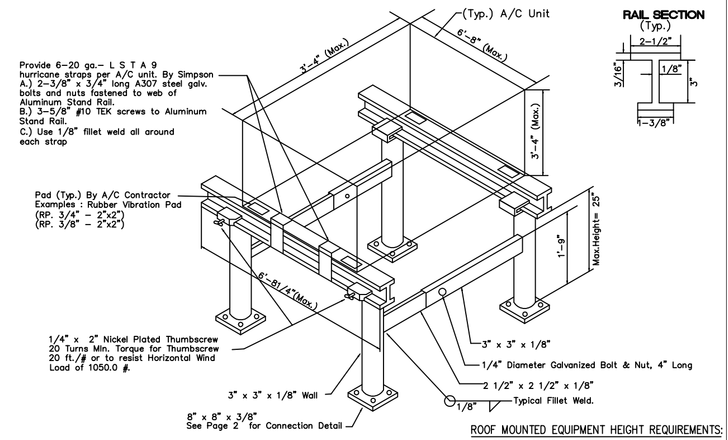

Notes:
1.) All Construction to meet Aluminum Association Specs.
2.) Support frame & anchorage comply with structural requirements of S.B.C. /ASCE 7-98 (150 Mph) Coastal Exposure "C" - Dade County Approval # 99-0318-01
3.) Support Frame 6061-T6 Aluminum Alloy, Welded either than shown.
4.) Vibration insulator pads shall be provided by the A/C Contractor so as not to cause vibration to existing sub- structure

ROOF MOUNTED EQUIPMENT HEIGHT REQUIREMENTS:

WIDTH OF EQUIPMENT	HEIGHT OF LEGS
UP TO 24"	14"
25" TO 36"	18"
37" TO 48"	30"
49" TO 60"	30"
61" AND WIDER	48"

* NOTE: LOCATE EQUIPMENT A MINIMUM DISTANCE OF 24" FROM PARAPET WALL OR OTHER PERMANENT STRUCTURES

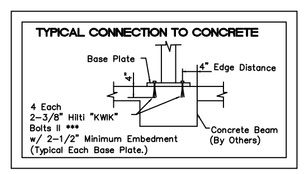

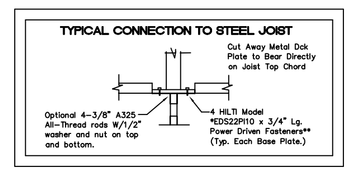

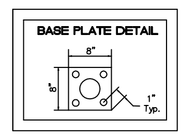

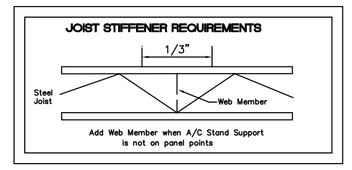

Notes:

1.) Frame with stands Wind pressure as per S.B.C.C.I 2001 edition, ASCE 7-98 (150 MPH), Dade City Product Approval Exposure D,Costal Zone.
2.) Maximum height above ground of frame shall not exceed 120" feet.
3.) It is the responsibility of the Contractor to provide adequate anchorage as shown on this plan. Base Plate Assembly shall be encased within roofing material.
4.) 6061-T6 alloy is an exterior exposure aluminum.
5.) A/C Contractor shall provide corrosion resistant isolation pads at bottom of base plates when bearing on concrete and steel structures.
6.) Frame shall be Aluminum alloy 6061- T6.
7.) Yield strengths shall be 35 ksi and conform to the American Aluminum Association standards.
8.) Weld filler shall be Aluminum alloy 5556 with tensile strength of 30 ksi.
9.) Connection conditions that differ from those above shall be designed by the Engineer of record. Fasteners used other than shown, subject to approval by Engineer of Record.
*** Or Equivalent

CONDENSING UNIT MOUNTING DETAIL

NOT TO SCALE

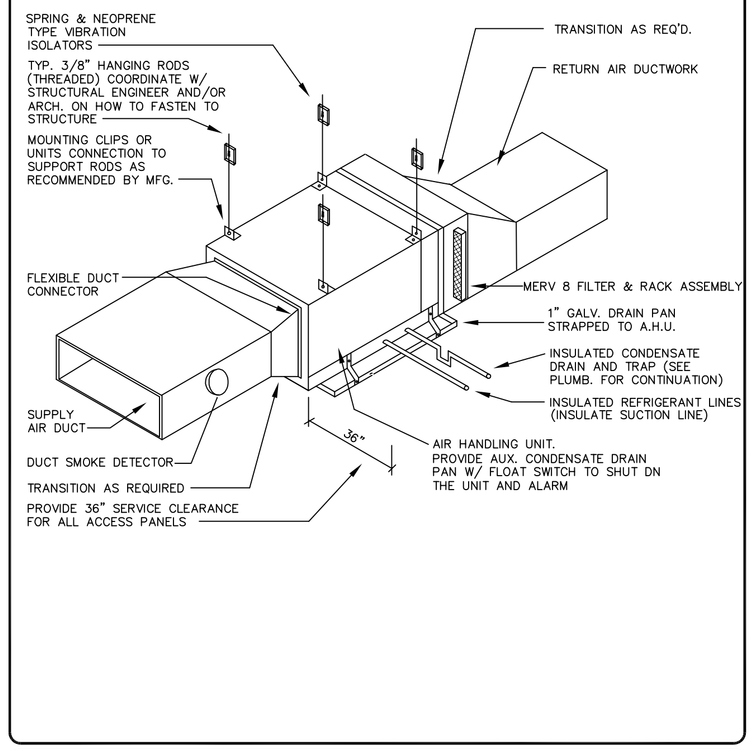

AHU HANGING DETAIL

NOT TO SCALE

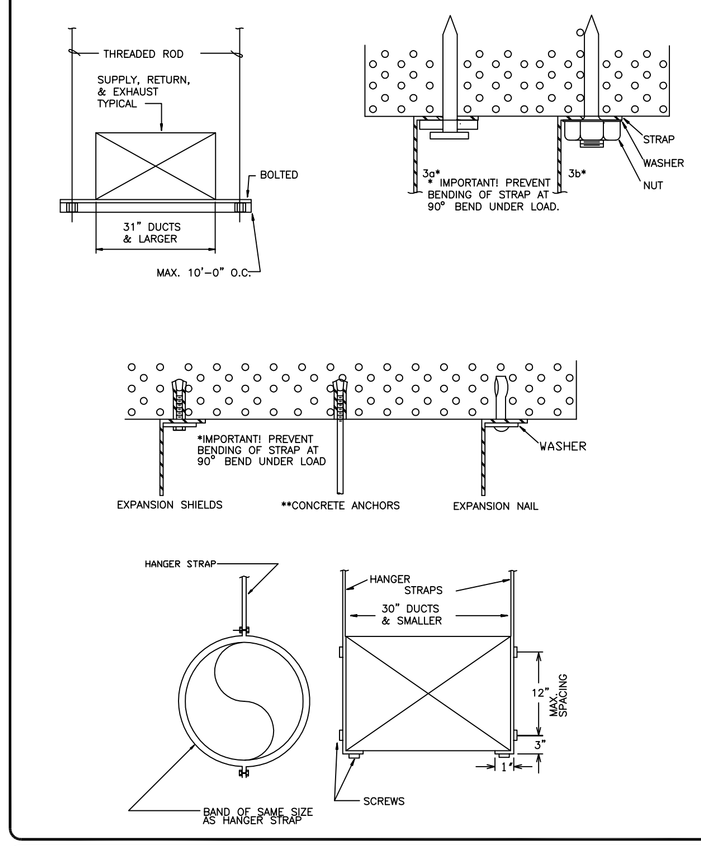

DUCTWORK HANGER DETAIL

NOT TO SCALE

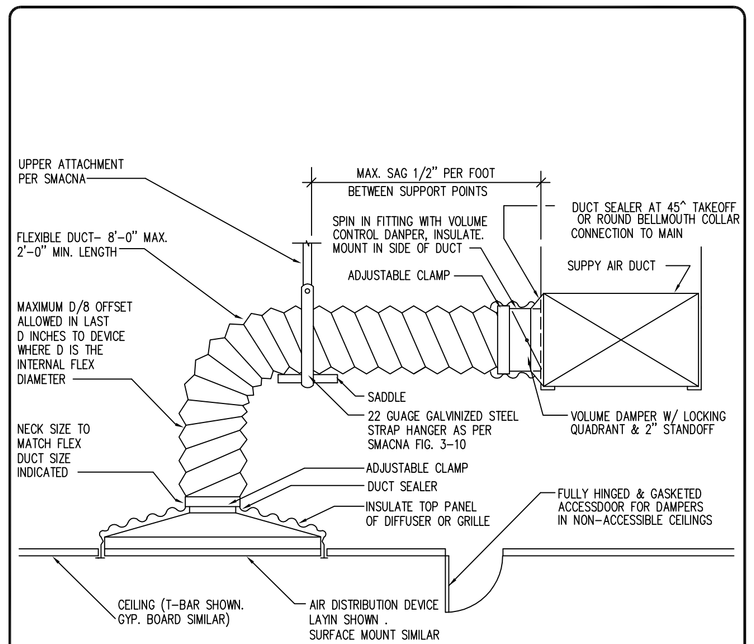

NOTES
1. FLEXIBLE DUCTS SHALL BE ONE PIECE AND SHALL NOT BE SPLICED TOGETHER .
2. EXTEND FLEXIBLE DUCT INSULATION TO DUCT/DIFFUSER PANEL INSULATION AND SEAL WITH MASTIC .
3. FLEXIBLE AIR DUCT SHALL NOT EXCEED 8 FT. WHEN EXTENDED . ELBOW RADIUS SIZED FOR NO LESS THAN R / D = 1.0 .

FLEXIBLE DUCT CONNECTION DETAIL

NOT TO SCALE

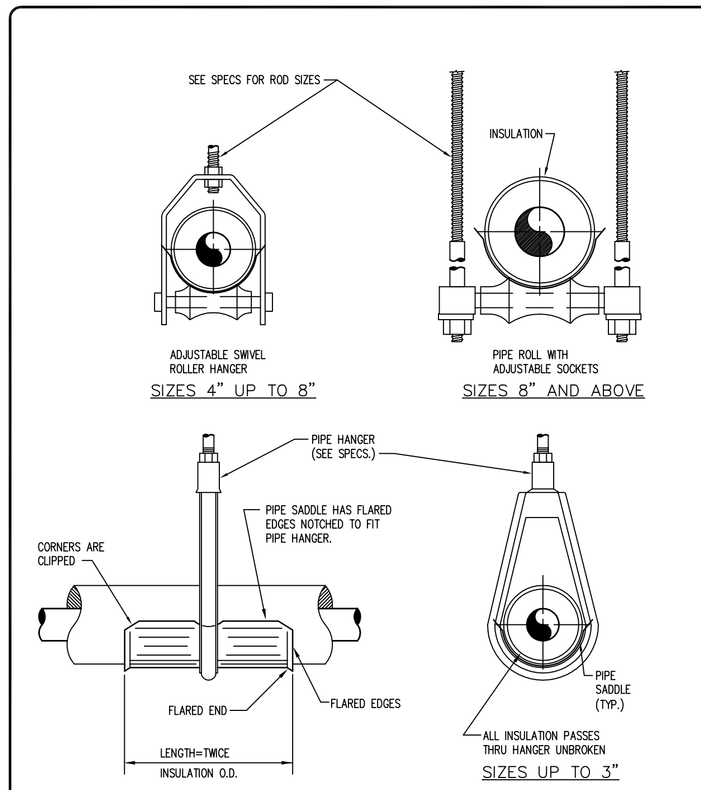

INSULATED PIPE HANGER

NOT TO SCALE

MATTHEW F. WEST
AR93859

WEST ARCHITECTURE + DESIGN, LLC
AA26001503

318 SOUTH DIXIE HIGHWAY
SUITE 4-5
LAKE WORTH, FL. 33460
561-588-2027 T
561-582-9419 F
www.west-arch.com

COPYRIGHT NOTICE 2010.

ALL IDEAS, DESIGNS, ARRANGEMENTS AND PLANS INDICATED OR REPRESENTED BY THIS DRAWING ARE THE PROPERTY OF THIS OFFICE AND WERE CREATED , EVOLVED AND DEVELOPED FOR USE ON AND IN CONNECTION WITH THE SPECIFIED PROJECT. NONE OF THE IDEAS, DESIGNS, ARRANGEMENTS OR PLANS SHALL BE USED BY OR DISCLOSED TO ANY PERSONS, FIRM OR CORPORATION FOR ANY PURPOSE WITHOUT THE WRITTEN PERMISSION OF WEST ARCHITECTURE + DESIGN, LLC.

CONSULTANT:

NEW FACILITY FOR:

HAVERHILL MEDICAL OFFICE BUILDING

1520 N HAVERHILL RD
WEST PALM BEACH, FL 33421

DATE:09.24.2010
NUMBER: A10-008
REVIEWED: RBC
MANAGED: XXX
DRAWN:DRAWN BY

MECHANICAL DETAILS

project CAINE ENGINEERING INCORPORATED
RESPONSIVE ENGINEERING
MECHANICAL ELECTRICAL PLUMBING/FIRE PROTECTION
1948 EAST SUNRISE BLVD.SUITE#1
FORT LAUDERDALE, FLORIDA 33304
P. 954.767.8886 F. 954.767.9934
www.projectcaine.com
#P06000009451, CA#28087

M-2.1.0